Rain Master Eagle/Eagle Plus ET Weather Center Sensor Assembly

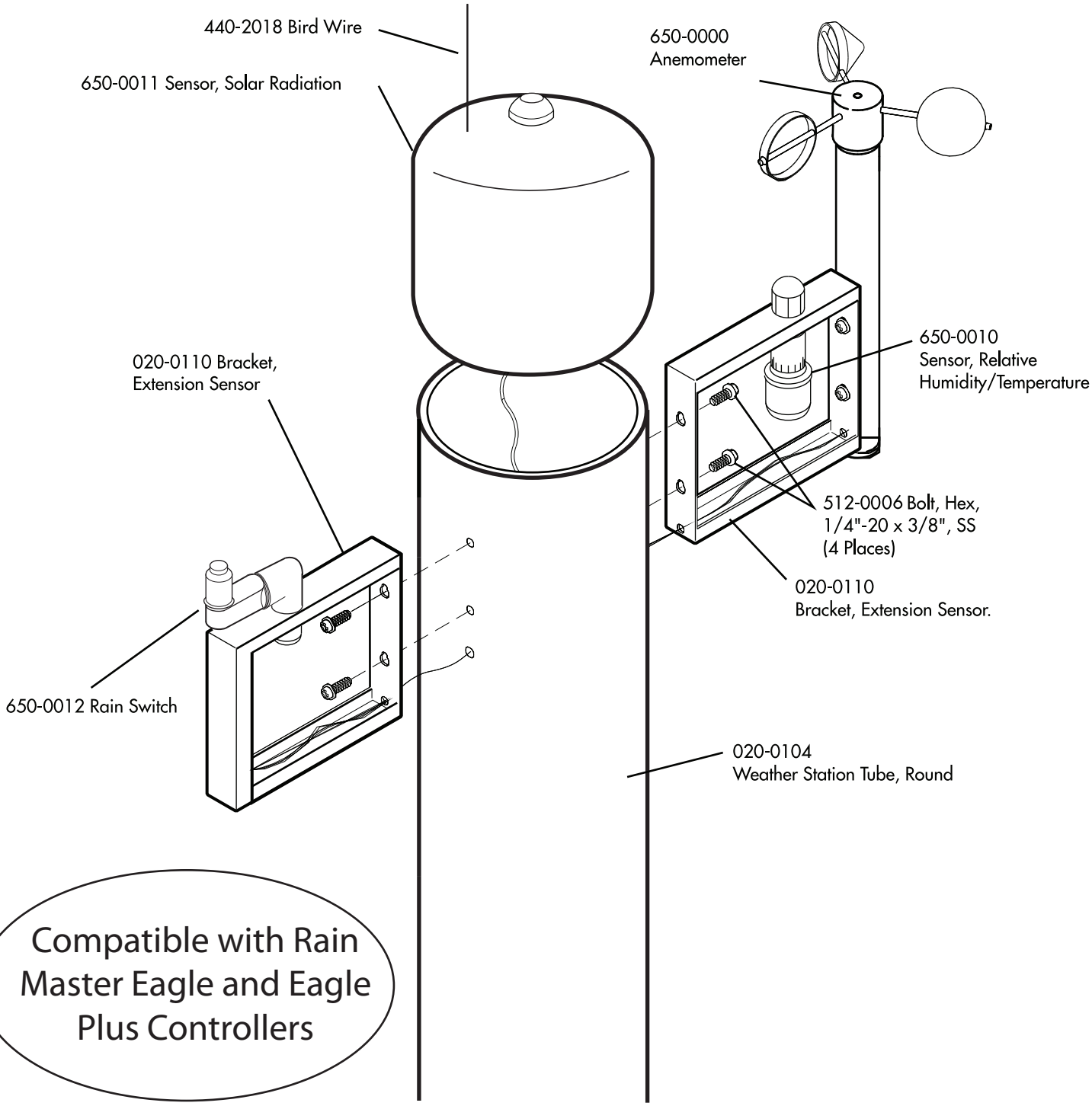

Compatible with Rain Master Eagle and Eagle Plus Controllers

Irritrol®