RAIN MASTER™ TWICE 2-WIRE • WIRE CONNECTION DETAIL

RAIN MASTER®
CONTROL SYSTEMS

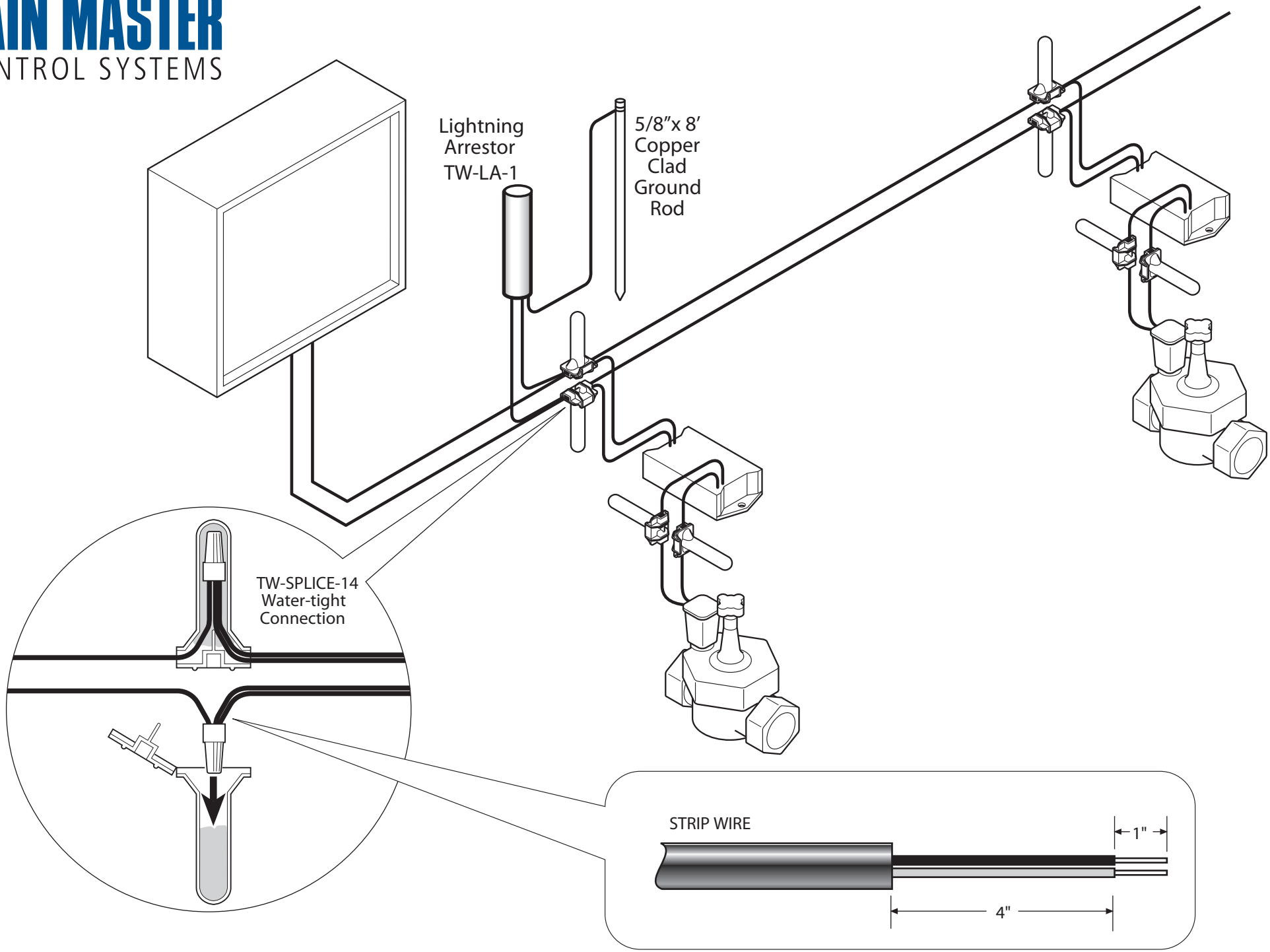

Irritrol Part No. 500547 Rev. B

Irritrol®